User manual

Used oil receiver

Model 3601

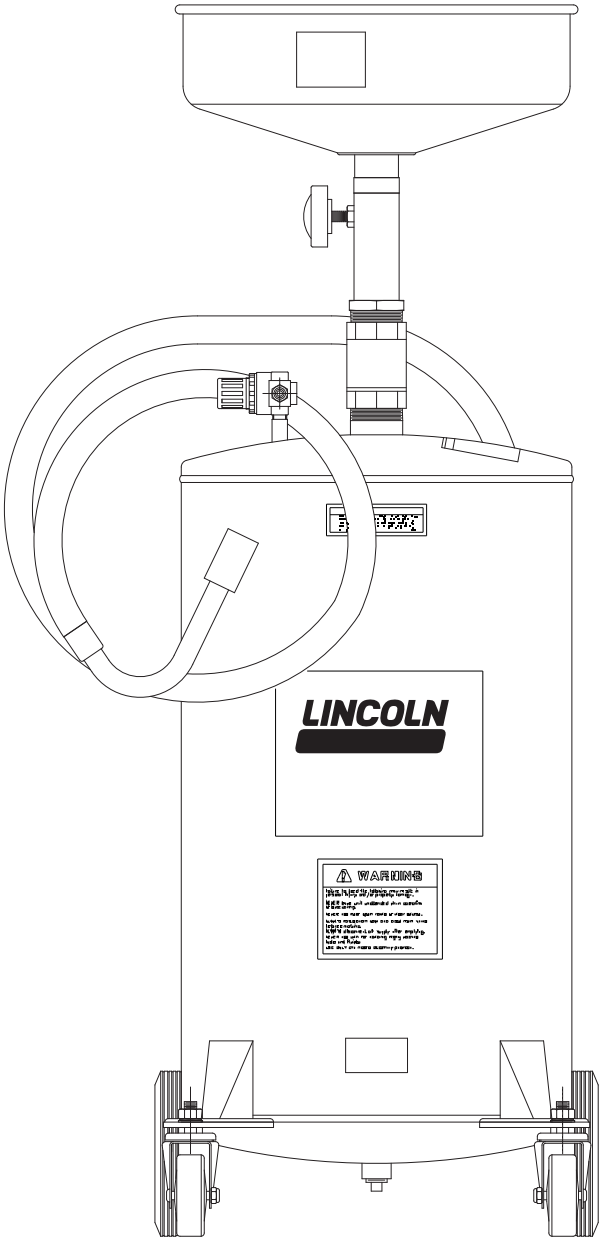

Date of issue	**March 2026**
Form number	**404401**
Version	**3**

Contents

Safety 3
Explanation of signal words for safety 3
Owner/Operator responsibility 4
Notice 4
General safety standards 4
Inspection 5
Cleaning and maintenance 5
Dimensions 5
Specifications 5
Part identification 6
Parts list 6
Drain oil into tank * 7
Remove oil from tank * 7
Labels on tank * 7
Warranty 8

Safety

The assembly must be installed, maintained and repaired exclusively by persons familiar with the instructions.

This equipment generates high pressure. Extreme caution should be used when operating this equipment as material leaks from loose or ruptured components can inject fluid through the skin and into the body. If any fluid appears to penetrate the skin, seek attention from a doctor immediately. Do not treat injury as a simple cut. Tell attending doctor exactly what type of fluid was injected.

Any other use not in accordance with instructions will result in loss of claim for warranty or liability.

- Do not misuse, over-pressurize, modify parts, use incompatible chemicals, fluids or use worn or damaged parts.
- Always read and follow manufacturer's recommendations regarding fluid compatibility and use of protective clothing and equipment.
- Failure to comply may result in personal injury and/or damage to equipment.

Explanation of signal words for safety

NOTE
Emphasizes useful hints and recommendations as well as information to prevent property damage for efficient and trouble-free operation.

⚠ CAUTION
Indicates a dangerous situation that can lead to light personal injury if precautionary measures are ignored.

⚠ WARNING
Indicates a dangerous situation that could lead to death or serious injury if precautionary measures are ignored.

⚠ DANGER
Indicates a dangerous situation that will lead to death or serious injury if precautionary measures are ignored.

⚠ WARNING



Do not operate equipment without reading and fully understanding safety warnings and instructions.

Failure to follow warnings and instructions may result in death or serious personal injury.

⚠ WARNING



Do not operate equipment without wearing appropriate footwear. Keep feet clear of wheels when in use. Wear safety shoes to protect against possible roll back.

Failure to comply may result in death or serious personal injury.

⚠ CAUTION

Do not operate equipment without wearing personal protective gear.

Wear eye protection. Protective equipment such as dust mask, non-slip gloves, non-skid safety shoes or hard hat used for appropriate conditions will reduce personal injuries.

Failure to comply may result in light personal injury.



Owner/Operator responsibility

It is the owner/operator responsibility to properly use and maintain this equipment.

The instructions and warnings contained in this manual shall be read and understood by the owner/operator prior to operating this equipment.

The owner/operator shall retain this manual for future reference to important warnings, operating and maintenance instructions.

Notice

This device dispenses fluid using pressurized air, and complies with the specifications of the Uniform Fire Code, Standard Fire Prevention Code and the National Fire Protection Association, (NFiPA-30). It does not comply with current provisions of BOCA section F.5.3. You should consult your local fire marshal concerning code compliance of this device.

⚠ DANGER

Do not use in explosive atmosphere.

Failure to comply will lead to death or serious injury.

General safety standards

The standards listed below must be observed for prevent injury to operators and damage to the waste oil receiver.

- Read all labels on the waste oil receiver carefully, do not cover them and replace them immediately if damaged.
- The waste oil receiver must only be used by authorized personnel trained in its use.
- **Never** leave unit unattended when operating or evacuating.
- **Never** use near open flame or heat source.
- **Always** disconnect air supply after emptying.
- **Never** use unit for handling highly volatile fuels or fluids.
- Use only the nozzle assembly provided.
- Pay attention to other people in the vicinity while the waste oil receiver is operating, especially children.
- Do not use the waste oil receiver in an environment subject to explosion hazard.
- Do not use the waste oil receiver as a means of transport.
- Do not use acid solutions which could damage the waste oil receiver and/or injure persons.
- The waste oil receiver will remain in place up to a maximum gradient of 0.5%, Before beginning to slide.
- If the waste oil receiver malfunctions, contact the dealer or send it to the nearest service center.
- When replacing parts, always demand **original** replacement parts from an authorized Lincoln dealer or retailer.

NOTE

Waste oil receiver must not be used at more than 10 psi *(0,69 bar)*.

Fig. 1 *

Dimensions

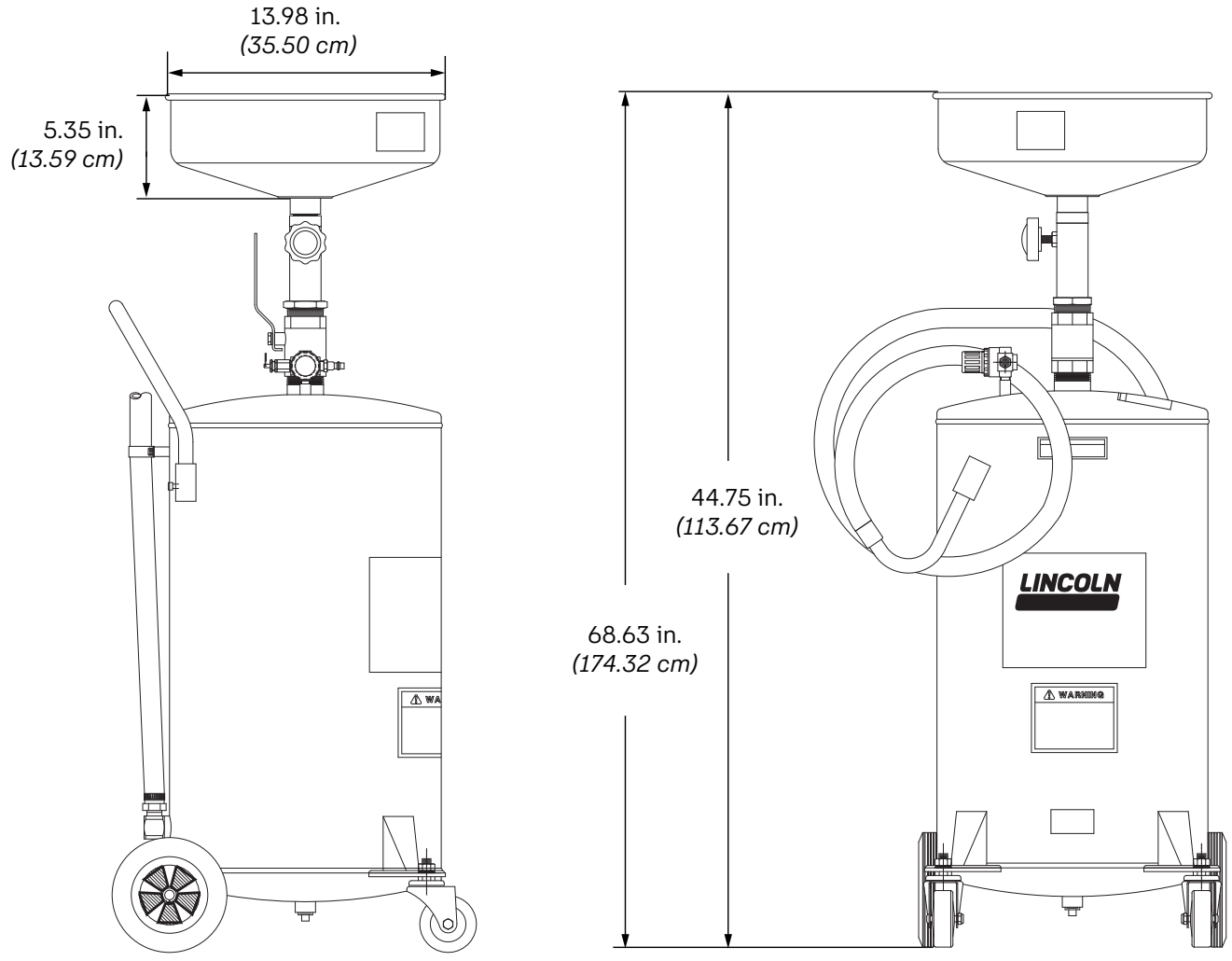

* Indicates change.

Table 1

Specifications

Tank capacity	72.0 qts *(68.1 l)*
Drain bowl capacity	11 qt *(10.4 l)*

Inspection

Prior to operation or maintenance, a visual inspection shall be made. Check for worn parts, air leaks, damaged, loose or missing parts.

Check tank operation by connecting air to air nipple and closing ball valve. Verify that there is sufficient air flow coming from nozzle/hose assembly.

If the unit is damaged, badly worn or operates abnormally, it should be removed from service. Contact a factory authorized service center for repair.

An annual tank/component inspection is recommended to be performed by a factory authorized service center.

Cleaning and maintenance

The waste oil receiver does not require any special maintenance, other than normal, external cleaning, which should be done with a damp cloth (water and alcohol or normal detergent for household appliances).

NOTE

Waste oil receiver must not be cleaned with nitrocellulose-based solvents.

Fig. IPB 1 *

Part identification

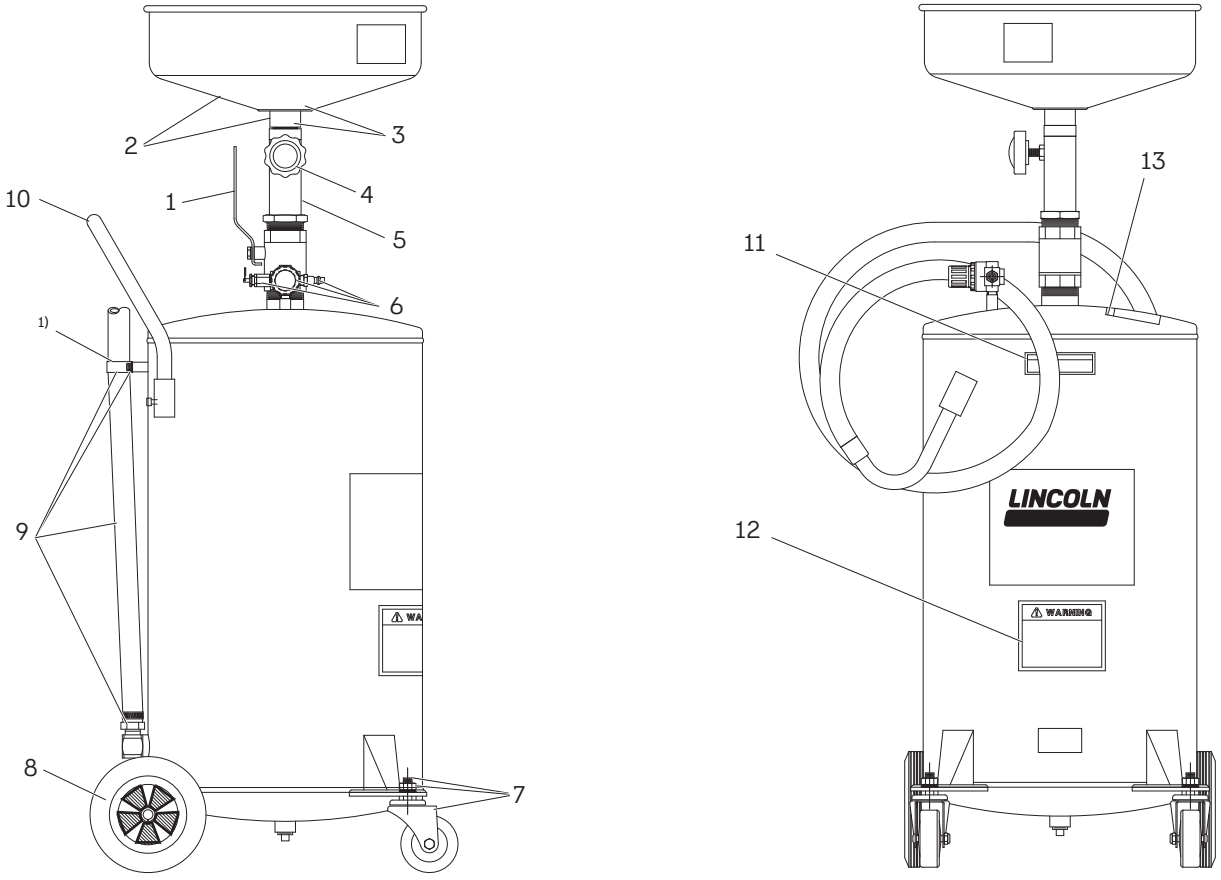

1) Hose strap fill line

Table 2 *

Parts list

Item	Descriptions	Part number	Quantity	Item	Descriptions	Part number	Quantity
1	Ball valve kit	275678	1	7	Caster kit	275636	1
2	Bowl kit	275640	1	8	Wheel kit	275637	1
3	Bowl and ext tube kit	275641	1	9	Drain hose kit	275642	1
4	Locking knob kit	275639	1	10	Handle kit	276313	1
5	Locking sleeve kit	279911	1	11	Warning label	247130	1
6	Regulator kit	275638	1	12	Warning Failure to HEED	248337	1
				13	Operating instruction	275674	

* Indicates change.

Drain oil into tank *

1 Air line must be disconnected from tank.
2 Raise drain bowl/tube to desired height and lock in place by turning knob clockwise.
3 Main valve must be fully open, with valve handle in vertical position.
4 Do not overfill tank. Check sight gauge tube frequently. Do not fill above hose strap.

Remove oil from tank *

1 Tank should be wheeled to main oil collection reservoir.
2 Place drain nozzle into reservoir opening.
3 With drain bowl raised, close main valve handle to horizontal position.
4 Connect air supply to tank with maximum supply pressure of 150 psi *(10.3 bar)*.
5 Disconnect air supply when empty.

Labels on tank *

Labels on reservoir tank are located as shown in **Fig. IPB 1**, **page 6**.

Operating instructions label (**13**) text is shown in **Fig. 2** for tank and bowl kit. Warning label (**12**) text for tank and bowl kit is shown in **Fig. 4**. General warning instructions label (**11**) is shown in **Fig. 3**. If labels are damaged, removed or unable to be read, replacement should be ordered as shown in **Fig. 2**, **Fig. 3**, and **Fig. 4 WARNING** (**12**).

Fig. 2

DRAIN OIL INTO TANK

1. Air line must be disconnected from tank. Do not overfill tank. Check sight gauge tube frequently.
2. Raise drain bowl /tube to desired height and lock in place by turning knob clockwise.
3. Main valve must be fully open, with valve handle in vertical position.

REMOVING OIL FROM TANK

1. The tank should be wheeled to the main oil collection reservoir.
2. Place drain nozzle securely into reservoir opening.
3. With drain bowl raised, main valve must be fully engaged with valve handle in horizontal position.
4. Connect air supply to tank (maximum supply pressure of 150 PSI [10.3 BAR])
5. Oil will drain from tank into reservoir. Disconnect air supply when finished.

Fig. 3

Failure to heed the following warning may result in personal injury and/or property damage. Pop-off valve and preset, non adjustable regulator have been installed for your protection.
Do not tamper with or remove.

Fig. 4

Failure to heed the following may result in personal injury and/or property damage.

NEVER leave unit unattended when operating or evacuating.

NEVER use near open flame or heat source.

ALWAYS raise drain bowl and close main valve before emptying.

ALWAYS disconnect air supply after emptying.

NEVER use unit for handling highly volatile fuels and fluids.

USE ONLY the nozzle assembly provided.

* Indicates change.

Warranty

The instructions do not contain any information on the warranty. This can be found in the General Conditions of Sales, available at:
www.lincolnindustrial.com/technicalservice or
www.skf.com/lubrication.

skf.com | lincolnindustrial.com

® SKF and Lincoln are registered trademarks of the SKF Group.

© SKF Group 2026

The contents of this publication are the copyright of the publisher and may not be reproduced (even extracts) unless prior written permission is granted. Every care has been taken to make sure the accuracy of the information contained in this publication but no liability can be accepted for any loss or damage whether direct, indirect or consequential arising out of the use of the information contained herein.

March 2026 · Form 404401 Version 3